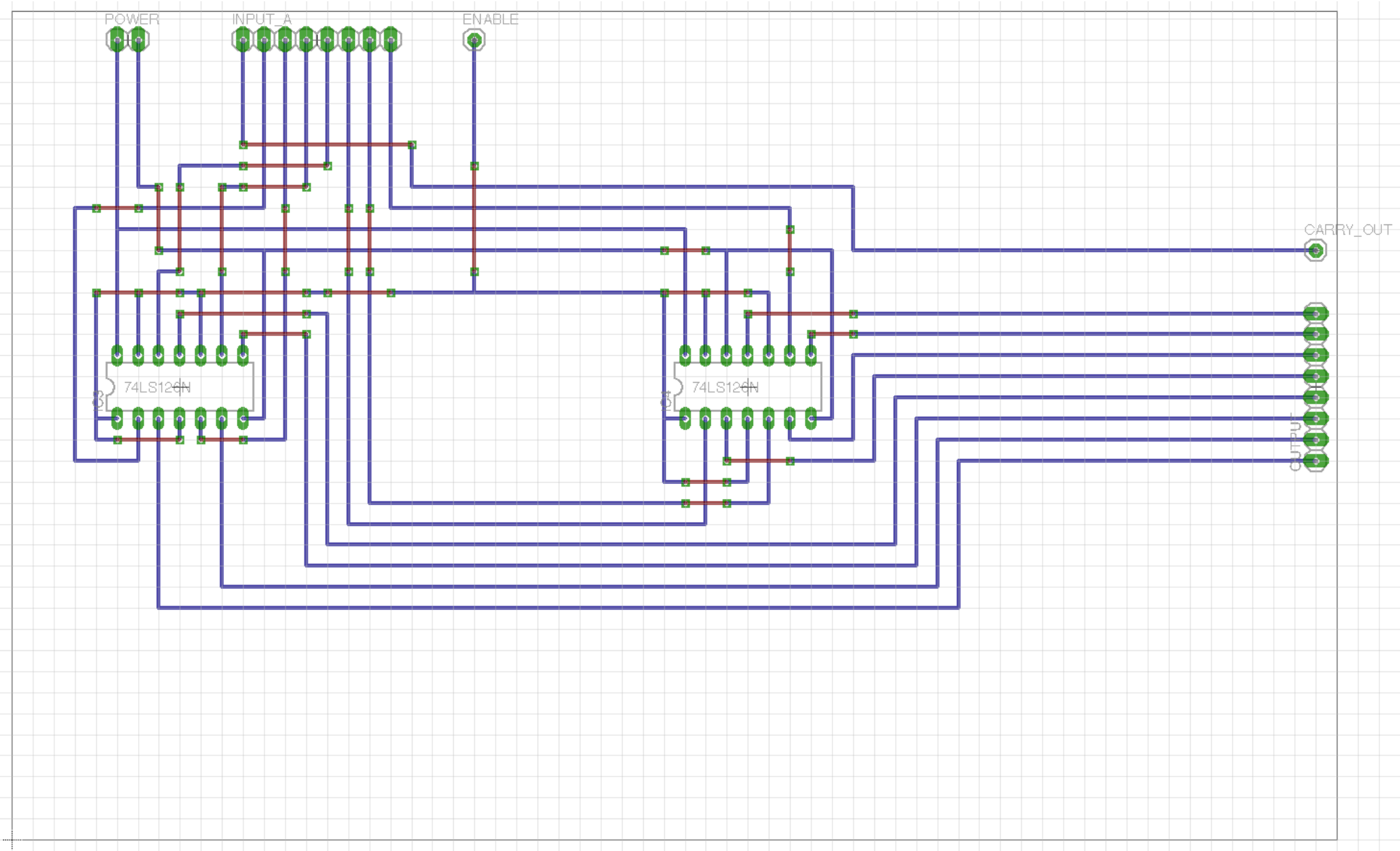
POWER
INPUT_A
ENABLE
CARRY_OUT
74LS126N
74LS126N
OUTPUT