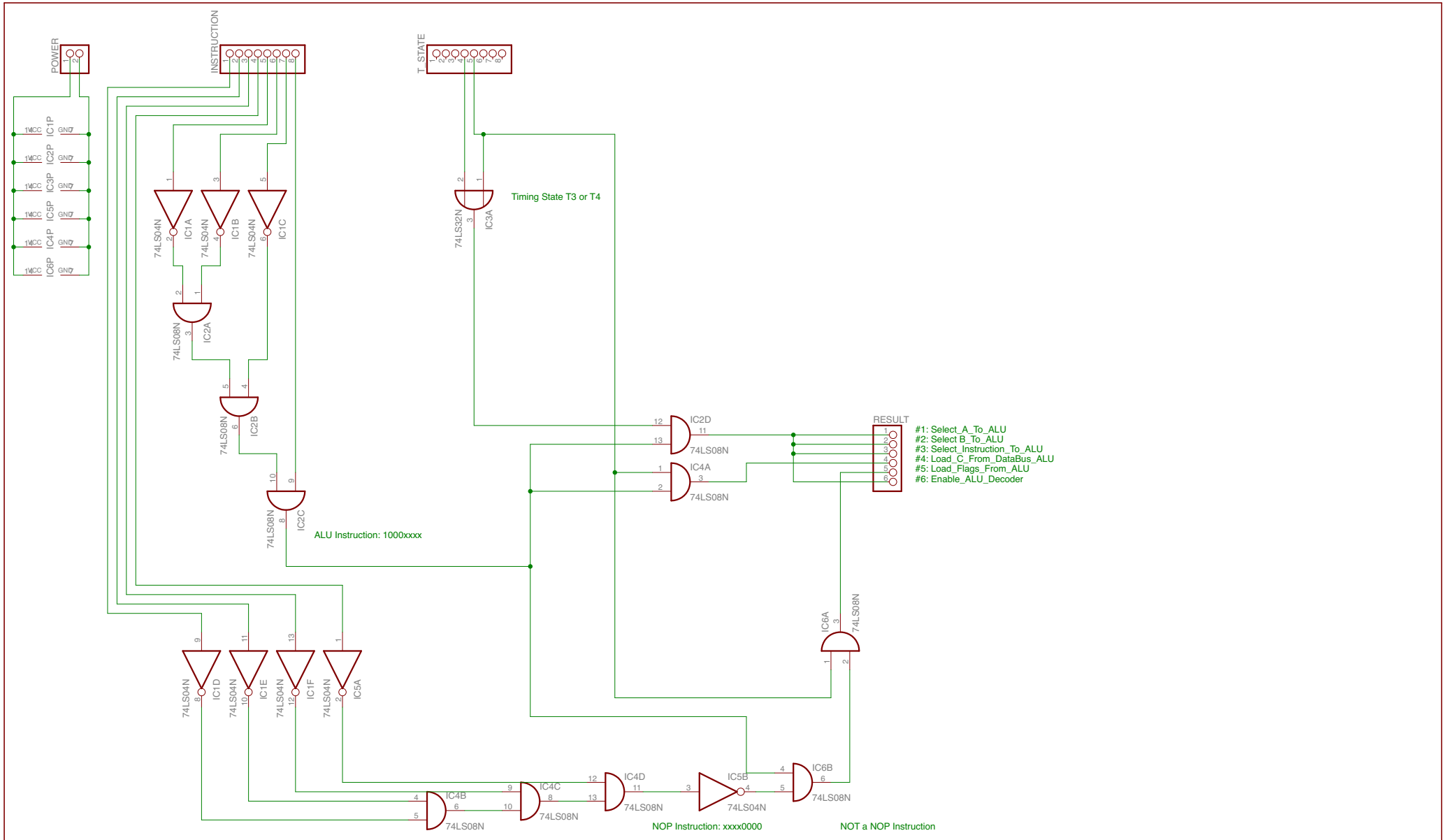

TITLE: 04_ALU	
Document Number:	REV:
Date: 01.04.2016 15:46	Sheet: 1/1